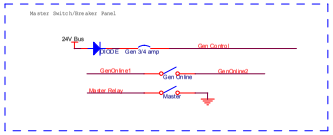

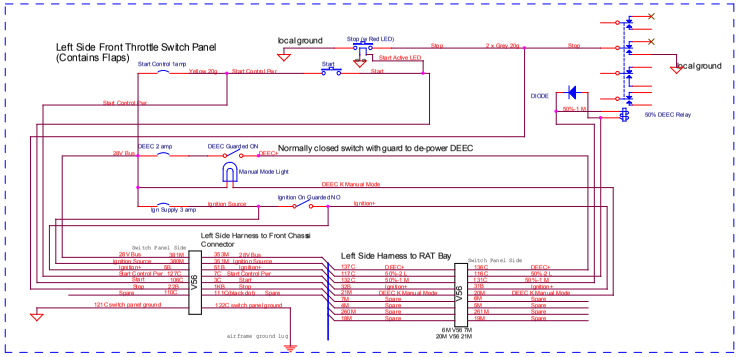

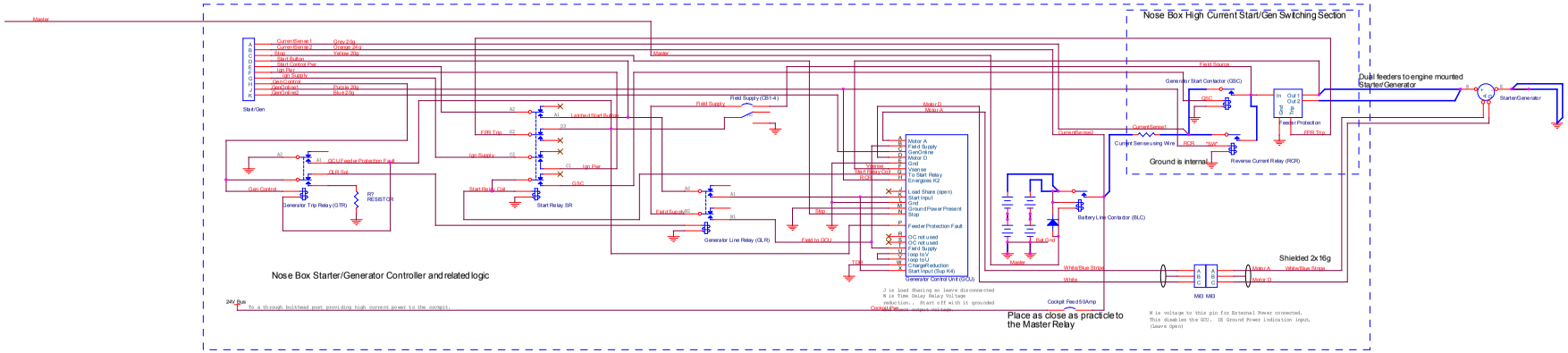

Title	L39 Nose Starter/Generator and Hydraulic Pump
Size D	Document Number L39-Nose
	Rev A.1
Date: Monday, April 15, 2019	Sheet 1 of 1